DATASHEET

Duplex Patchcable E2000™/APC-SC OS2 2m 3mm yellow G657A1 Grade C

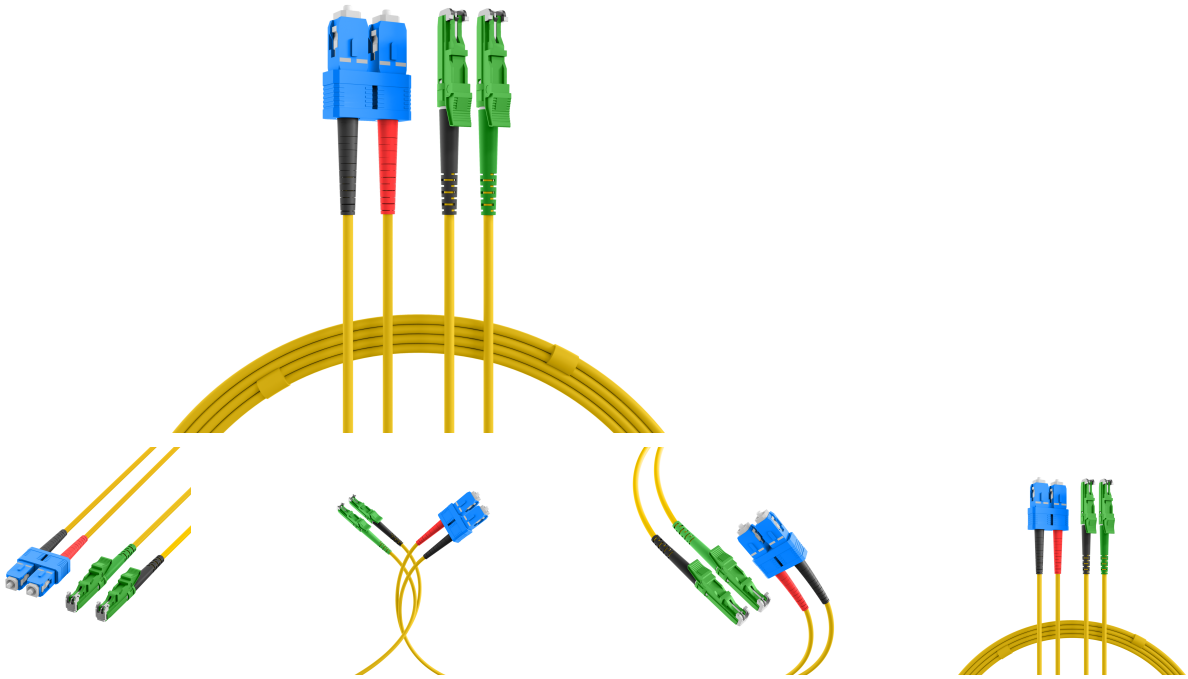

General data

Fiber jumper are well defined components in international standard of structured cabling ISO/IEC11801.
Due to many different network protocols created in the last 25 years , also a wide range of connectors had been developed. Some of them are still important today: LC, SC, E2000®, MPO/MTP.

Fiber jumper (patchcord) are defined as shortest connection between passive interface and active deviceport, regarding structured cabling standard. Rating of performance, known as category, as well as performance of total transmission channel, known as link class,Similar descriptions for patchcords: Connection cable, drop cable, adapter cable, interconnecting cord, Jumper

Features of EFB fiber optic patch cables
Tension relief reinforced with aramid yarn
Halogen-free and flame-retardant sheath according to IEC-60754-2, IEC-60332-1 and IEC-61034

Technical properties	
Anti-kink sleeve	put-on
Bend optimized fiber	yes
Cable structure	Duplex
Cable type	I-V(ZN) H

This datasheet was created automatically on 16-10-2026 . Technical changes reserved.

EFB-Elektronik GmbH
Striegauer Straße 1
33719 Bielefeld

fon: +49 521 40 41 8-0
fax: +49 521 40 41 8-50

info@efb-elektronik.de
www.efb-elektronik.de

WIR SORGEN FÜR VERBINDUNG
WE CARE FOR CONNECTION

DATASHEET

Duplex Patchcable E2000™/APC-SC OS2 2m 3mm yellow G657A1 Grade C

Cable Ø	3 mm
Category	OS2 G657A1
Colour outer sheath	yellow
Fibre type	Single mode 9/125
Flame retardant	acc. to IEC 60332-1
Halogen free	acc. to IEC 60754-2
Insertion loss 1310nm	≤ 0,25 dB
Insertion loss 1550nm	≤ 0,25 dB
Low smoke	acc. to IEC 61034-1
Material outer sheath	LSZH
Min. Bending radius (Dynamic)	50mm mm
Min. Bending radius (Static)	30mm mm
Number of fibres	2
Operating Temperature	-20 – 70 °C
Packaging	EFB-Electronics poly bag (resealable)
Reinforcment	Aramid
Return loss 1550nm	≥45 dB
Return loss 1310nm	≥45 dB
Scope of delivery	1x Patchcable, 2x Duplex Clip, 1x Measurement Report, 1x Information Sheet
Storage Temperature	-25 – 60 °C
Type of connector connection 1	E2000™/APC
Type of connector connection 2	SC

Available variants

ArtNr.	Bezeichnung	Length	Outer diameter sheath single fibre	Length tolerance
O0939.0,5	Duplex Patchcable E2000™/APC-SC OS2 0,5m 3mm yellow G657A1 Grade C	0.5 m	3.0 mm	±5 %
O0939.1	Duplex Patchcable E2000™/APC-SC OS2 1m 3mm yellow G657A1 Grade C	1.0 m	3.0 mm	±5 %
O0939.10	Duplex Patchcable E2000™/APC-SC OS2 10m 3mm yellow G657A1 Grade C	10.0 m	3.0 mm	±5 %
O0939.15	Duplex Patchcable E2000™/APC-SC OS2 15m 3mm yellow G657A1 Grade C	15.0 m	3.0 mm	±5 %

This datasheet was created automatically on 16-10-2026 . Technical changes reserved.

EFB-Elektronik GmbH
Striegauer Straße 1
33719 Bielefeld

fon: +49 521 40 41 8-0
fax: +49 521 40 41 8-50

info@efb-elektronik.de
www.efb-elektronik.de

WIR SORGEN FÜR VERBINDUNG
WE CARE FOR CONNECTION

DATASHEET

Duplex Patchcable E2000™/APC-SC OS2 2m 3mm yellow G657A1 Grade C

O0939.2	Duplex Patchcable E2000™/APC-SC OS2 2m 3mm yellow G657A1 Grade C	2.0 m	3.0 mm	±5 %
O0939.20	Duplex Patchcable E2000™/APC-SC OS2 20m 3mm yellow G657A1 Grade C	20.0 m	3.0 mm	±5 %
O0939.25	Duplex Patchcable E2000™/APC-SC OS2 25m 3mm yellow G657A1 Grade C	25.0 m	3.0 mm	±5 %
O0939.3	Duplex Patchcable E2000™/APC-SC OS2 3m 3mm yellow G657A1 Grade C	3.0 m	3.0 mm	±5 %
O0939.30	Duplex Patchcable E2000™/APC-SC OS2 30m 3mm yellow G657A1 Grade C	30.0 m	3.0 mm	±5 %
O0939.35	Duplex Patchcable E2000™/APC-SC OS2 35m 3mm yellow G657A1 Grade C	35.0 m	3.0 mm	±5 %
O0939.40	Duplex Patchcable E2000™/APC-SC OS2 40m 3mm yellow G657A1 Grade C	40.0 m	3.0 mm	±5 %
O0939.5	Duplex Patchcable E2000™/APC-SC OS2 5m 3mm yellow G657A1 Grade C	5.0 m	3.0 mm	±5 %
O0939.50	Duplex Patchcable E2000™/APC-SC OS2 50m 3mm yellow G657A1 Grade C	50.0 m	3.0 mm	±5 %
O0939.7,5	Duplex Patchcable E2000™/APC-SC OS2 7,5m 3mm yellow G657A1 Grade C	7.5 m	3.0 mm	±5 %

Note on Intended Use

This data sheet is intended solely to describe the technical characteristics of the product. It does not replace an assessment of the product's suitability for a specific application. The user is responsible for ensuring that the product is used in accordance with its technical specifications and applicable legal and regulatory requirements.

EFB-Elektronik GmbH
Striegauer Straße 1
33719 Bielefeld

fon: +49 521 40 41 8-0
fax: +49 521 40 41 8-50

info@efb-elektronik.de
www.efb-elektronik.de

WIR SORGEN FÜR VERBINDUNG
WE CARE FOR CONNECTION