P1: M-015C	
P2: M-005	

Customer No:	No.6 EK500.2

FUSE:

LOGO	FUSE
5A 250V	5A

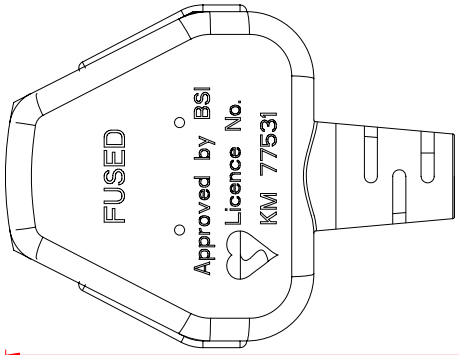

1 P2: EN EC 10 DVE

* NOTE: All relevant materials are complied with RoHS directive .

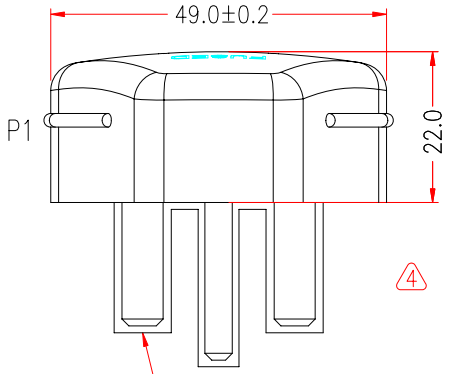

PLUG: MSL-403

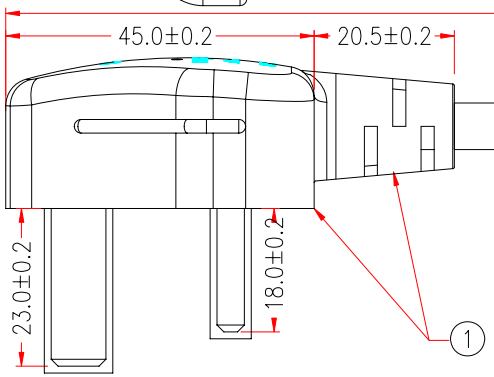

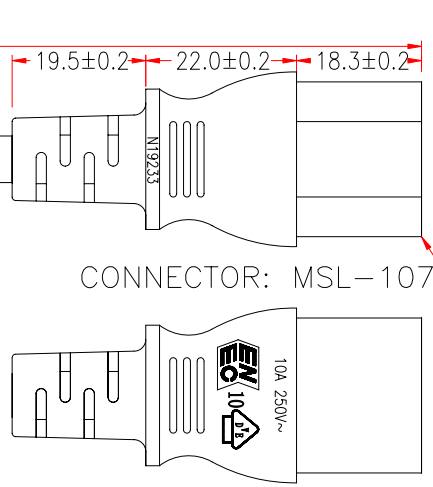

CONNECTOR: MSL-107

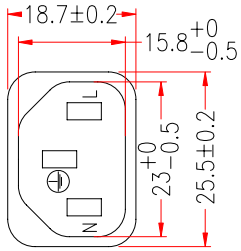

P2

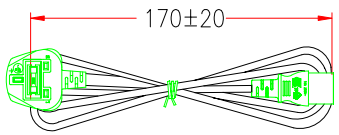

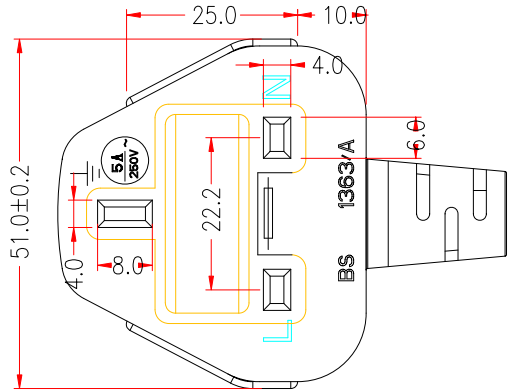

3 CONCAVE LETTERING WORD CABLE:
H05VV-F 3G 0.75mm² Ⓓ Ⓢ Ⓝ Ⓕ ÖVE KEMA-KEUR CEBEC IEMMEQU ◁VDE▷ ⊕
N20050 GTSA-3 3G 0.75mm² MSL CE

	P1		P2
BROWN	L	———	L
BLUE	N	———	N
GREEN/YELLOW	E	———	E

3	3	H05 W-F 3G 0.75mm², GTSA-3, OD6.8mm, JACKET BLACK, DRAWING No. EPH5V0107503C-102	H5TH21-0304K09	1980mm	M304
	2	MOLDED PVC 45P, COLOR BLACK	H1BF01-0304K09		M304
		BRACKET: CP-R445A-BS	A1QC61-0767	1	M767
		TERMINAL: 2*4mm, 98744BS-0/A	A1QB24-0257	3	M257
4	1	MOLDED PVC 45P, COLOR BLACK	H1BF01-0304K09		M304
		FUSE LATCH: MSL-403	A1QA40-0767	1	M767
		FUSE: 5A	A1QA04-0455	1	M455
		PRESSURE CAP, MSL-403	A1QA41-0402	1	M402
		PLUG BRACKET AND TERMINAL A PIECE TYPE:168T03, MSL-403	A1QA39-0402	1	M402
	No.	DESCRIPTION		Q'TY	Supplier

PART NO. 107402E3FS2C(FP081-02)	Revision:		
APPROVED		EFB ELEKTRONIK	
CHECKED	HU		
DRAWING	JIANGJU		
DATE	22/NOV/17	ITEM NO.	EK500.2

Cable Length Unless Other Spec. Tolerances:

0 ~200mm	±10mm
201~1000mm	±20mm
1001 ~1500mm	±25mm
1501~2100mm	±30mm
2100mm↑	±40mm

UNIT:mm

4 REV.4 2017.11.22	MODIFY P1 PLUG	
3 REV.3 2017.8.31	MODIFY P2 PLUG MODEL SIZE,CONCAVE LETTERING WORD CABLE AND BRACKET	
2 REV.2 2013.03.11	MODIFY CABLE MARKING CONTENT	
1 REV.1 2011.03.09	MODIFY P2 MODEL WORD	CHECKED